# Operational Excellence Services

## Operation

### Hot Air Recirculation (HAR) Digital

**Contact Us**

Technology Inquiries | Contact Us | JGC HOLDINGS CORPORATION

**Access to Our Homepage**

https://www.jgc.com/en/business/epc/operation-maintanance/service/

# Hot Air Recirculation (HAR) Digital

## HAR causes loss of LNG Production

Sudden HAR to the air-cooled heat exchangers could cause an under-speed trip of the gas turbines when the power usage of the Helper Motor (HM) exceeds its limit. Many operators, therefore, set the software limit to the HM power well below its designed capacity to cope with any unexpected HAR. This prevents the plant from realizing the full benefit of the motor power for maximum production.

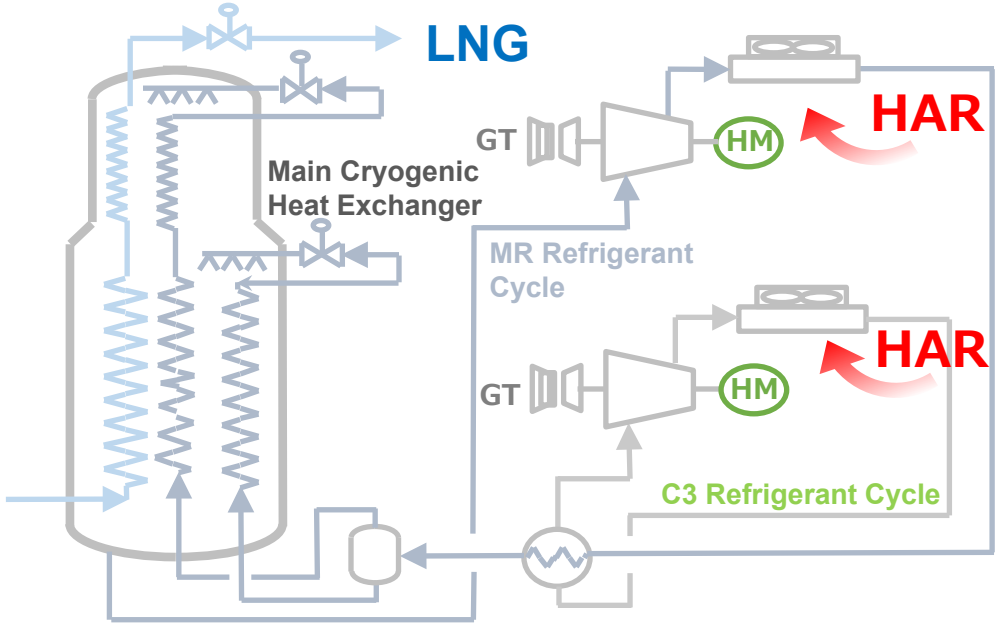


**HAR on C3 Condenser**

## What is HAR Digital ?

- HAR Digital is an auto control system powered by Artificial Intelligence (AI) to mitigate HAR.
- The feed-forward process control powered by the HAR Predictive Model allows you to realize the full benefit of the motor power which will enhance your LNG throughput by at least 2~3% without any major modification to your facility.

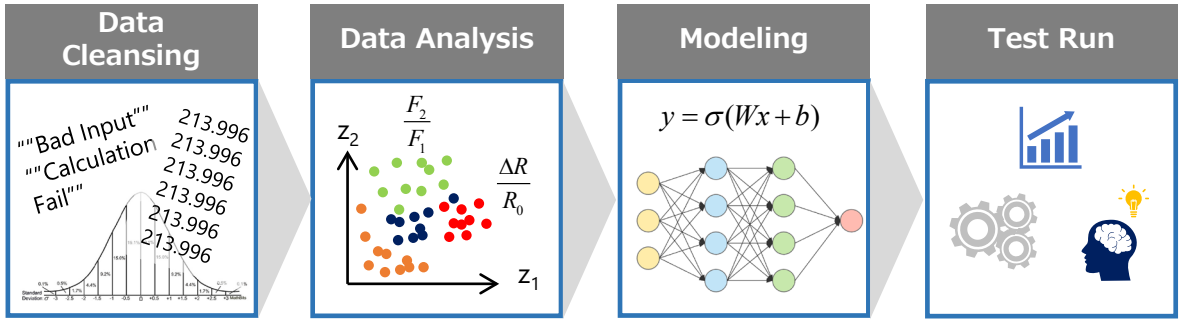


**AI Modeling**

# Hot Air Recirculation (HAR) Digital

Return to Operation menu

## Workflow & Results

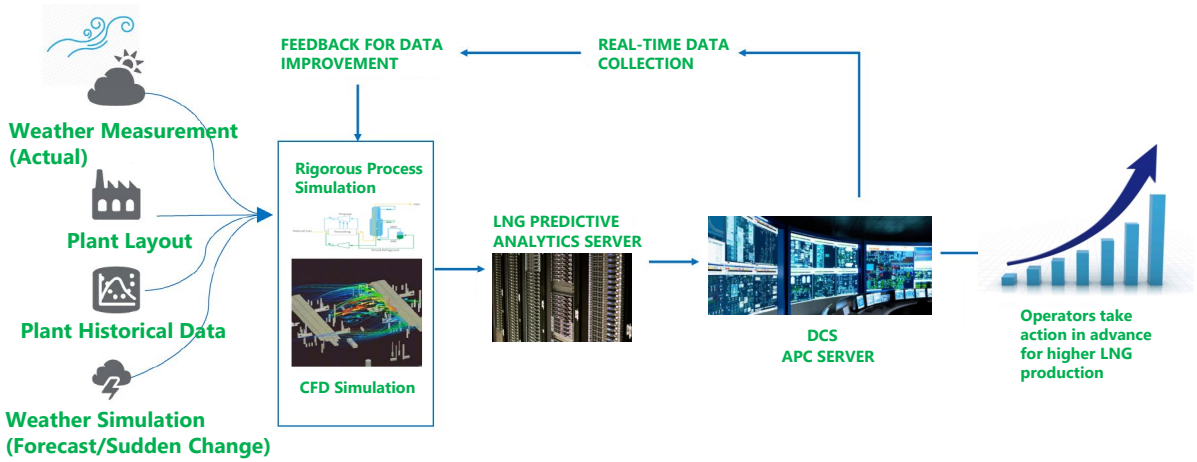


- Plant Data correction (Weather Data, Operating Data)
- Data Analysis by Data Scientist
- AI Modeling
- System Deployment

## Our Strengths

- Introduction of the Real-time Weather Monitoring System
- Process Big Data Analysis, CFD Simulation, and Rigorous Process Simulation
- JGC's extensive experience in LNG processes and Hot Air Recirculation Analysis

## Our Experiences

- HAR Digital is jointly developed with PETRONAS
- HAR Digital is deployed in Malaysia LNG and is in operation.
- This technology can be applied to various types of plants, not limited to LNG plants.

PETRONAS

© 2023 JGC GROUP